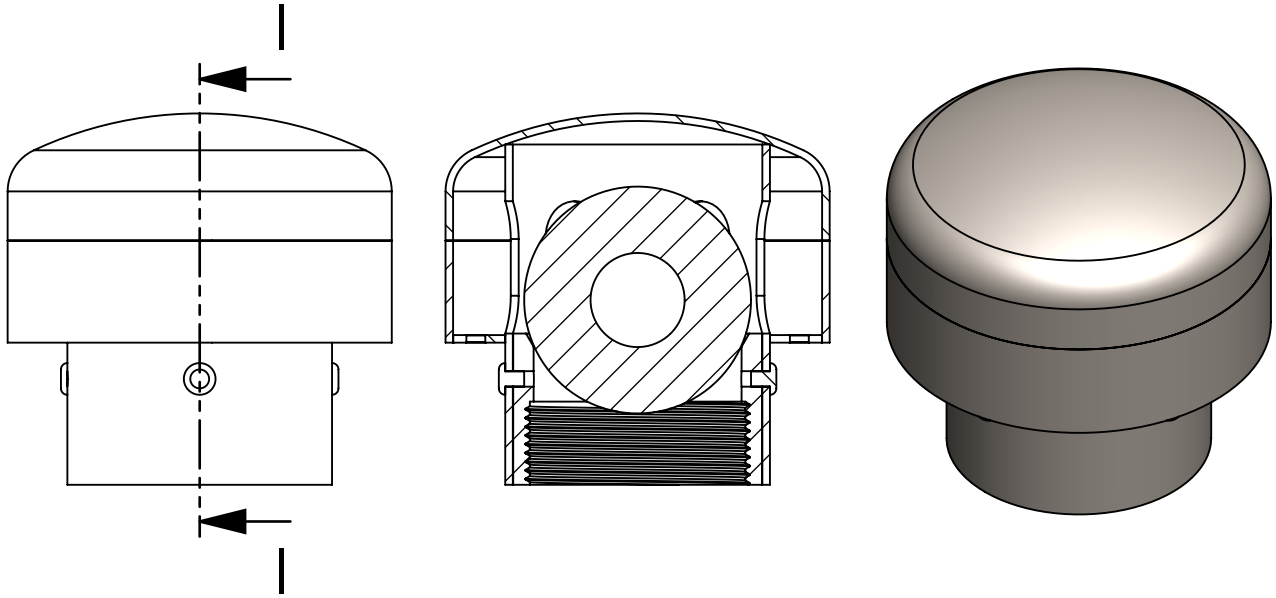

POS-NR.	BENENNUNG	MENGE
1	04.2318.00 W-ASM_SS_EBS-EF	1
2	07.2002.00 Bottom_SS_EBS_G2f	1
3	30.0407.10 Ball-full_PTFE_60mm	1
4	30.0662.00 Rivet_A2-A2_4x12mm_sealed-blind-rivet	4

GIEBEL Adsorber®
...setting standards in aeration drying!

General tolerances DIN ISO 2768-mK

DIN 6 T1 - Proj.method 1

Rev	Changes	Date	Name
a	Gitter raus	08.03.2022	DZ
b	Gitter rein	23.05.2023	DZ
c	W-ASM with rivets	23.10.2023	DZ
d	bugscreen +width	29.05.2024	DZ

	Date	Name
Created	08.06.2021	Daniel.Zinic
Released	29.05.2024	daniel.zinic

GIEBEL FilTec GmbH
www.giebel-adsorber.com
info@gf-dry.com

Observe protection note ISO 16016

Material: Stainless steel A4
Weight (kg): 1.17

Naming:
Ventilation System
EBS-EF_SS_1-V0,008_G2f

Article number:
08.0000.42

Status: approved
Format: A4
Scale: 1:2
Sheet / of: 1 / 1

Passing on and copying of this document, utilization and communication of its contents are prohibited unless expressly permitted.
Violations will result in liability for damages. All rights reserved in the event of patent, utility model or design registration.